

VISION
MARINE TECHNOLOGIES

BUILDING THE GATEWAY TO THE FUTURE OF BOATING

A SCALABLE, MULTI-CHANNEL MARINE PLATFORM

May 2026

VMAR

Nasdaq Listed

TSXV Listed

Forward-Looking Statements

This presentation contains forward-looking statements within the meaning of applicable Canadian securities laws and within the safe harbor provisions of the United States Private Securities Litigation Reform Act of 1995. Such statements include predictions, expectations, estimates, projections, and other information that might be considered future events or trends and that do not relate to historical matters. Forward-looking statements in this presentation include, without limitation, statements regarding the Company's business strategy, growth opportunities, operational integration initiatives, expected synergies from the acquisition of Nautical Ventures Group Inc., future revenue growth, margin expansion, market adoption of electric marine propulsion systems, expansion of OEM relationships, development of electric boating infrastructure and service programs, anticipated inventory monetization, future acquisitions, financing initiatives, and the Company's ability to improve operational efficiencies and achieve profitability. Forward-looking statements can often be identified by words such as "expects," "plans," "believes," "intends," "anticipates," "continues," "estimates," "projects," "potential," "opportunity," "may," "could," "would," "will," and similar expressions or variations (including negative variations) of such words and phrases. These forward-looking statements are based on management's current expectations, assumptions, estimates, and projections and are subject to known and unknown risks, uncertainties, and other factors that may cause actual results, performance, or achievements to differ materially from those expressed or implied by such statements. Such factors include, without limitation: the Company's ability to continue as a going concern; the Company's ability to achieve and maintain profitability; the Company's dependence on floor-plan financing and compliance with financing covenants; risks associated with integration and execution of acquired operations; the Company's ability to replace or expand revenue streams; the presence of material weaknesses in internal control over financial reporting; general economic, capital market, and industry conditions affecting the recreational boating sector; customer demand for electric marine technologies; supply chain disruptions; inventory and liquidity management risks; competition; regulatory developments; tariff and trade policy uncertainties; and other risks described in the Company's Annual Report on Form 20-F, as amended, for the year ended August 31, 2025, and in the Company's subsequent filings with the U.S. Securities and Exchange Commission ("SEC") and on SEDAR+. Although management believes that the assumptions and expectations reflected in the forward-looking statements are reasonable as of the date hereof, there can be no assurance that such assumptions or expectations will prove to be correct. Actual results and future events could differ materially from those anticipated in such forward-looking statements. Readers should not place undue reliance on forward-looking statements contained in this presentation, which speak only as of the date hereof. The Company undertakes no obligation to update or revise any forward-looking statements, whether as a result of new information, future events, or otherwise, except as required by applicable law. Certain market and industry data contained in this presentation are based upon information from third-party sources believed to be reliable, as well as management estimates and internal analyses. While the Company believes such information to be reasonable, it has not independently verified such information and cannot guarantee its accuracy or completeness. Neither the TSX Venture Exchange nor its Regulation Services Provider (as that term is defined in the policies of the TSX Venture Exchange) accepts responsibility for the adequacy or accuracy of this presentation.

Vision Marine Technology Platform Now Matched With Award Winning Market Access

VISION MARINE TECHNOLOGIES

- Integration expertise 25+ boats which covers 80% of Nautical Ventures' boats platform in inventory
- Established strategic relationships with major OEMs including white-label licensing
- Proprietary electric powertrain technology
- Growing manufacturer agreement portfolio
- USD $5.3 million in inventory ready for sale as of February 28, 2026
- Growing patent pending electric technology portfolio
- Electric boat rental operations with over 70,000 rentals to date

NAUTICAL VENTURES

- 2024 Winner of the *Boating Industry* Top 100 Boat Dealerships
- Revenue grew at a more than 22% CAGR over the last 5 years to approximately USD $100 million in 2024.
- Combined inventory and deposits to suppliers of USD $32.9 million as at February 28, 2026 (Vision Marine + Nautical Ventures)
- Floor-plan loans totaled USD $32.5 million as of August 31, 2025, and were reduced to USD $18.2 million as of February 28, 2026.
- 8 locations, extensive client database
- Exclusive 10-acre marina in Ft. Lauderdale
- Access to consumers across the gulf and Atlantic coasts
- Vision Marine retains option to purchase real estate with approximately USD $10.7 million in equity position.[1]

[1] Certain real estate used by Nautical Ventures is held by entities controlled by the previous owner, and in connection with the acquisition Vision Marine Technologies has the right to either acquire the real estate or receive the net proceeds from a sale, resulting in a recorded proceeds receivable of USD $10.4 million as of June 20, 2025. Following the sale of the two North Palm Beach properties, this receivable was reduced to USD $6.6 million upon receipt of net proceeds totaling US $3.8 million. The combined estimated USD $11 million equity value of the remaining real estate assets exceeds the remaining receivable amount, based on the latest appraised values.

Proactive Integration Driving Efficiencies

The rapid alignment process following Nautical Ventures acquisition



Growing Florida market sales through effective marketing strategies



AXOPAR | HIGHFIELD aluminum boats

BENETEAU | NORTHSTAR

NIMBUS

Operational progress further reinforced Nautical Ventures' foundation



- Integration of Vision Marine products into Nautical Ventures sales network completed in under four months.

- Relocation of key Vision Marine staff including its Chief Executive Officer to Florida post acquisition.

Increasing operational efficiency and market coverage through strategic real estate transactions



- Lease and purchase agreement of the Angler's Marina property in Ft. Lauderdale

- Sold property st 300 U.S. Highway 1 and 139 Shore Court, North Palm Beach (FL).

- Leaseback of property at 139 Shore Court maintains our continued dealership and service operations.

- USD $3.8 M net proceeds reinvested into operations and floor-plan debt reduction.

- Estimated USD $0.8 M annual savings from the Shore Court transaction; aggregated at USD $1.6 M per year.

Executing the Dual-Pillar Strategy

Integrating Vision Marine Technologies' Product Offering with Nautical Ventures' Sales Award Winning Network

ENHANCED CONSUMER OFFERING

Enhanced Electric Powerboat Offering.

Strengthening Best-in-Market Brands for Consumers with Exclusive Distribution

Expanding Electric Product Selection with Exclusivity in Strategic Market

SALES EXECUTION

Executing Sales Through Precision Marketing and Strong Boat Show Results

PUBLIC MARKETS

Expanding Investor Market Acessibility



Vision Marine Technologies Positions for Scalable Electric Adoption Through Dominant Pontoon Segment; Introduces SPECTR 26 Flagship Platform

March 11, 2026



Nautical Ventures Adds AIATA Boat Brand to Its Product Portfolio

MARCH 23, 2026



Vision Marine and Nautical Ventures Secure Exclusive Twin Vee Territory in Broward County and Introduce Signature Adventure V Edition

MARCH 30, 2026



Vision Marine Technologies Activates AI-Enabled Retail Platform to Enhance Sales Execution Across Nautical Ventures Network

APRIL 14, 2026



Vision Marine Technologies Accelerates Operational Transformation with NVG Segment Near EBITDA Breakeven and Significant Balance Sheet Improvements

APRIL 15, 2026



Vision Marine Technologies to Commence Trading on TSX Venture Exchange

APRIL 29, 2026

Continued Expansion Strategic Growth Levers

Leveraging Our Newly Created Vertically Integrated Potential

Expand Aftersales and Maintenance Programs to All Boat Sales.



Service infrastructure currently operational while work is underway to structure new consumer-facing maintenance and subscription programs, supported by dedicated marketing efforts.

Offer E-Motion™ 180E: EV Installation and Maintenance Services



With inventory on hand, Vision intends to deploy electric-ready service bays across key locations to support installation, diagnostics, and repairs for both Vision Marine systems and third-party electric platforms.

Financing and Insurance Delivered at the Point of Sale



Year-to-date performance indicates that financing and insurance (F&I) operations continue to be a strong contributor to overall revenue, maintaining solid margins even with fewer unit sales.

VISION MARINE TECHNOLOGIES

Nautical Ventures:

Strategic Location Ownership

Winner
TOP 100 BoatingIndustry
2024

NAUTICAL VENTURES

- USD $10.6 M real estate equity[1]
- 8 Locations
- Robust Installations
- Strong Brand Presence

Nautical Ventures serves as the commercial foundation of the platform. With over USD $100 million in annual sales in 2020 to 2023, eight Florida-based locations, and an extensive customer database, it is recognized as a prominent retail player in the U.S. boating industry. The company operates two waterfront dealerships and a managed marina, providing access to high-traffic sales environments. Nautical Ventures contributes tangible assets to Vision Marine Technologies through its real estate holdings and established presence with consumers across Florida. Its relationships with leading OEMs and experience in rentals and financing further enhance its role as a valuable commercial channel.

NAUTICAL VENTURES GROUP OWNED PROPERTIES

FORT LAUDERDALE



1400 S. Federal Hwy, Fort Lauderdale, FL 33316

FORT LAUDERDALE



1440 S. Federal Hwy, Fort Lauderdale, FL 33316

TAMPA BAY



1925 US HWY 19, Holiday, FL 34691

PALM CITY



3359 SW 42nd Ave, Palm City, FL, 34990

[1] Certain real estate used by Nautical Ventures is held by entities controlled by the previous owner, and in connection with the acquisition Vision Marine Technologies has the right to either acquire the real estate or receive the net proceeds from a sale, resulting in a recorded proceeds receivable of USD $10.4 million as of June 20, 2025. Following the sale of the two North Palm Beach properties, this receivable was reduced to USD $6.6 million upon receipt of net proceeds totaling US $3.8 million. The combined estimated USD $11 million equity value of the remaining real estate assets exceeds the remaining receivable amount, based on the latest appraised values.

Award-Winning Retail Network

An Acquisition of a US East Coast Retail Powerhouse

Located 3.3 Miles from FLL Airport



FORT LAUDERDALE MARINA [1]



Full Marina Service Conversion

USA First Electric Boating Hub.

4470 Anglers Ave, Ft. Lauderdale, FL 33312

PENSACOLA



700 Myrick St Suite D, Pensacola, FL 32505

SARASOTA



8050 N Tamiami Trail, Sarasota, FL 34243

PALM BEACH



139 Shore court, North Palm Beach, FL 33408



[1] Anglers Marina is a leased property.

VISION MARINE TECHNOLOGIES

Nautical Ventures locations

Properties

	Cost	Improvement	Current Outstanding Mortage	Book Equity	Current Value	New Equity	Mortage Maturity
1925 US-19, Holiday, FL 34691	2,267,562	120,696	1,476,490	911,768	4,000,000	2,523,510	12/17/31
1400 Federal, Fort Lauderdale, FL 34691	6,000,000	372,072	4,340,326	2,031,836	10,100,000	5,579,764	2/24/32
1400 Federal, Fort Lauderdale, FL 34691	2,890,000	-	1,925,104	964,896	3,800,000	1,874,896	2/24/32
3359 SW 42nd Ave, Palm City, FL, 34990	1,027,516	-	691,480	336,036	1,200,000	508,520	7/21/32
	12,185,078	492,768	8,433,310	4,244,536	19,100,000	10,666,690	

Locations

FT. LAUDERDALE MARINA & SERVICE
4470 Anglers Ave, Fort Lauderdale, FL 33312

TAMPA BAY DEALERSHIP
1925 US HWY 19, Holiday, FL 34691

PALM BEACH DEALERSHIP
139 Shore Court, North Palm Beach, FL 33408

RIVIERA BEACH KAYAK RENTAL
200 East 13th St, Riviera Beach, FL 33404

SARASOTA DEALERSHIP
8050 N. Tamiami Trail, Sarasota, FL 34243

DANIA BEACH DEALERSHIP STORE
50 S Bryan Rd, Dania Beach, FL 33004

PENSACOLA DEALERSHIP
700 Myrick St Suite D, Pensacola, FL 32505

VISION MARINE TECHNOLOGIES

Vision Marine: Technology Innovator

A Proven Powerful Electric Propulsion Solution on the Water

Vision Marine Technologies' E-Motion™ electric outboard is the first certified 180 HP continuous propulsion system in the marine industry, already integrated into over 25 different OEM boat platforms. The company's engineering team, operating since 2021, has expanded its commercial footprint by embedding directly into Nautical Ventures' infra-structure. With intellectual property protection and a growing OEM pipeline.

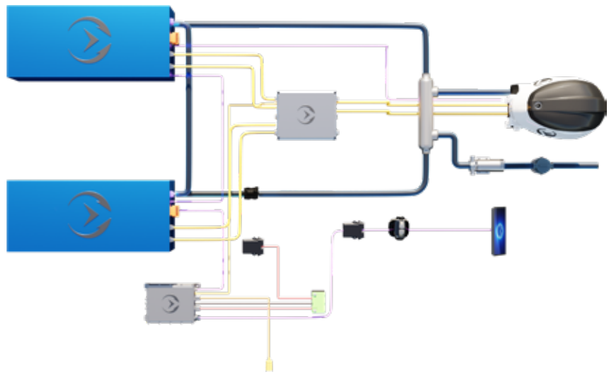

E MOTION
ELECTRIC POWERTRAIN TECHNOLOGY™



BRP ENGINEERING · McLAREN Engineering · LINAMAR Power to Perform · OCTILLION™

Proprietary and Patent-Pending Advanced Electric Marine Powertrain Technology

- Third-Party Validated, Industrialized Production Technology
- Extensively Tested for Performance and Reliability

Industrial Production Ready High Voltage Electric Powertrain

- Supply Chain in place
- Linamar certification is now complete

USD $5.3 million in Inventory[1] On Hand Ready To Be Integrated into Boats

Proprietary Technology Portfolio Supported by Multiple Patents

[1] Includes inventory and supplier deposits at August 31, 2025

Protecting Our Proprietary Technologies

Strategic patent filing for key components essential for electric HV marine propulsion.

E MOTION™
ELECTRIC POWERTRAIN TECHNOLOGY

1. Cryptographic Authentication Of Components In An Electric Vessel -4/24/24
2. Controlling A Cooling System Water Intake Pump Of An Electric Marine Vessel- 4/30/24
3. Implementing A Torque Fuse In An Electric Marine Propulsion System - 5/6/24
4. Battery Pack For An Electric Marine Vessel- 5/15/24
5. Responding To Detecting An Error Associated With One Or More Powertrain Components Of An Electric Vessel - 5/31/24
6. Authenticating Powertrain Components Of An Electric Vessel By A Battery Management Controller - 1/13/25
7. Enhancing Safety In An Electric Marine Vessel Using Independent Fault Detection Loops In A Power Distribution Unit For An Electric Marine Vessel - 1/27/25
8. Distributed Control System Architecture For An Electric Marine Vessel - 2/6/25
9. Outboard Power Control Unit For Controlling An Electric Motor Of An Outboard Engine - 2/24/25
10. Adaptive Control Of A Water Pump In A Marine Propulsion System - 3/10/25
11. Establishing Secure Communication Between An Interface Device And Control Systems Of An Electric Marine Vessel - 4/8/25
12. Overload Protection For A Cooling Pump Motor In An Electric Marine Vessel - 5/7/25
13. Retrofit Cooling-Inlet Assembly For A Lower Unit Of An Electric Outboard Engine - 11/4/25
14. Drive Shaft Alignment Of An Electric Outboard Engine – 2/12/25
15. Electric Outboard Engine Apparatus With Interchangeable Shaft Coupler – 2/18/25



Charges Anywhere | Regular Shore Power Compatible 120/240V

HV Powertrain Integration Expertise

25 Integrations - Across 13 Boat Brands

PONTOONS - CATAMARAN - CENTERCONSOLE - BOWRIDERS

SMOKER CRAFT, INC. · AXOPAR · STARCRAFT MARINE · FOUR WINNS · WIRED ELECTRIC PONTOONS · HELLKAT POWERBOATS · S2 POWER BOATS · Massimo Marine · AQUASPORT · PRINCECRAFT · XSHORE · VISION MARINE TECHNOLOGIES · STERK

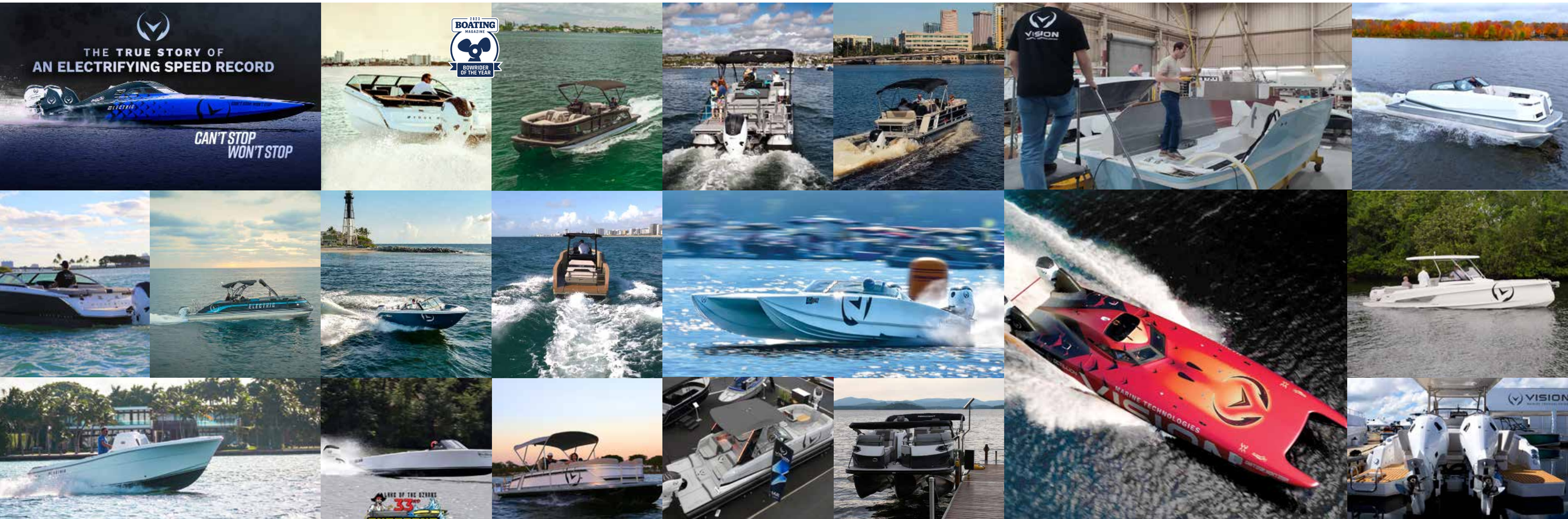

A Strong Strategic and Operational Match

BRANDS CARRIED BY NAUTICAL VENTURES

BENETEAU · AXOPAR · Wellcraft OWN THE OFFSHORE · BRABUS · STARCRAFT MARINE

EdgeWater · HIGHFIELD DARE TO EXPLORE · NORTHSTAR · MERCURY · YAMAHA · TOHATSU · SUZUKI

NIMBUS

New Exclusive West Coast Partnership

Vision Marine Positions for Growth with Exclusive Nimbus Boats USA Distribution on Florida's West Coast - AUGUST 14, 2025

E-MOTION™
ELECTRIC POWERTRAIN TECHNOLOGY

The E-Motion™ Marine Powertrain Technology can be integrated into approximately 80% of the boats brands Nautical Ventures currently carries. We believe the tender market—where Nautical Ventures is a prominent Florida distributor—and the fast-growing leisure pontoon segment offer prime platforms for Vision Marine's E-Motion™ 180 HP high-voltage electric powertrain, combining an opportunity for ideal vessel fit with strong sales channels.

Financial Snapshot

Combined Revenue

Pro-Forma revenue for the year ended Aug. 31, 2025 [1]

USD $76.5 M

Combined Inventory

Includes inventory and deposits to suppliers as of February 28, 2026

USD $32.9 M

The addition of Vision Marine's E-Motion™ inventory and integration capability are opportunities to diversify revenue streams and expand margins. With additional electric offerings, recurring services, and value-added financing, the combined entity is focused on growing revenues, margins, and achieving sustainable cash flows.

[1] Pro-Forma Revenue if Vision Marine had acquired Nautical Ventures on September 1, 2024

Consolidated Financial Results

	Unaudited for the 6-month period ended, February 28, 2026	Audited for the fiscal year ended August 31, 2025
Sales	30,224,328	13,832,556
Cost of sales	21,628,521	9,066,062
Gross profit	8,595,807	4,766,494
Total operating costs	14,773,347	15,079,841
Income (loss) from operations	(6,177,540)	(10,313,347)
Net income (loss) [2]	(6,177,473)	(21,651,993)
Cash (used in) in operating activities	366,723	(8,930,421)

[2] Includes non-cash Goodwill impairment losses of $15,082,026 in the fiscal year ended August 31, 2025

Select unaudited consolidated balance sheet data (USD $)

	As of February 28, 2026
Cash and short-term investments	4,061,703
Working capital	9,966,737
Total assets	58,631,838
Total liabilities	49,142,453
Shareholders' equity	9,489,385

VISION MARINE TECHNOLOGIES

Vision Marine Technologies Inc.
Capitalization Structure

As of May 6, 2026

Common shares issued and outstanding	2,593,989
Pre-funded warrants (WAEP: CAD $0.01)	2
Common shares and pre-funded warrants	2,593,991
Convertible notes issued to former shareholders of NVG (US$5.6 million note convertible at US$344.96 per share)	16,164
Options outstanding (WAEP: US$58,538.24)	68
Restricted share units outstanding (vest upon the achievement of specified market-capitalization thresholds)	12,500
Warrants outstanding (WAEP: USD $30.44)	451,013
Fully diluted common shares	3,073,756
Contingent common shares issuable [1, 2, 3]	19,299
Fully diluted common shares with contingent issuances	3,093,035

[1] Up to 6,376 common shares may be issued to the former shareholders of NVG, contingent upon full satisfaction of the conditions related to the NVG real estate acquisition.

[2] US$2 million convertible note may be issued to the former shareholders of NVG contingent upon the settlement of certain pre-acquisition claims against NVG. The note would be convertible at US$344.96 per share.

[3] Under the terms of an employment agreement executed on Septemebr 25, 2025, Alexandre Mongeon will be is sued 7,125 of our common shares as compensation for moving his entire family to Southern Florida. The common shares will be issued once the move is completed.

Highlights

- **USD $5.4 M market capitalization (basic) as of December 1, 2025**
- **USD $9.5 M book value of equity as of February 28, 2026**
- **Combined inventory and deposits to suppliers of USD $32.9 M as at February 28, 2026.**
- **USD $10.7 M in real estate equity [4]**

[4] Certain real estate used by Nautical Ventures is held by entities controlled by the previous owner, and in connection with the acquisition Vision Marine Technologies has the right to either acquire the real estate or receive the net proceeds from a sale, resulting in a recorded proceeds receivable of USD $10.4 million as of June 20, 2025. Following the sale of the two North Palm Beach properties, this receivable was reduced to USD $6.6 million upon receipt of net proceeds totaling US $3.8 million. The combined estimated USD $10.7 million equity value of the remaining real estate assets exceeds the remaining receivable amount, based on the latest appraised values.

At-the-Market Equity Program

The Company currently has an active at-the-market ("ATM") equity program. As of May 6, 2026, the Company has issued an aggregate of 1,576,294 common shares under the ATM Program at a weighted average price of US$1.66 per share, for gross proceeds of US$2,610,862.48, and net proceeds of US$2,495,853.61, after deducting placement agent commissions and transaction costs of US$115,008.87. See the Company's public filings for additional information.

VISION MARINE TECHNOLOGIES

Strategic Focus and Growth Opportunities

We endeavor to:

- Drive margin improvement through services, F&I offerings, and operational integration;
- Expand OEM and white-label integrations to scale E-Motion™ deployments across multiple brands;
- Pursue strategic and opportunistic acquisitions to accelerate growth and broaden market reach;
- Geographically expand our dealerships; and streamline our complementary and diversified revenue streams including marinas, boat storage and financing.

Uniquely Positioned:

Dominant In ICE Sales Today,
And Prepared To Capitalize
On Electric Growth Tomorrow.



Technology Integration Pushing the Limits of Electric Speed Performance.

prime video Can't Stop, Won't Stop | Now available on YouTube

LAKE OF THE OZARKS 34TH SHOOTOUT

2019	2021	2022	2023
30 MPH	49 MPH	109 MPH	116 MPH
VOLT 180	BRUCE 22	HELLKAT	S2

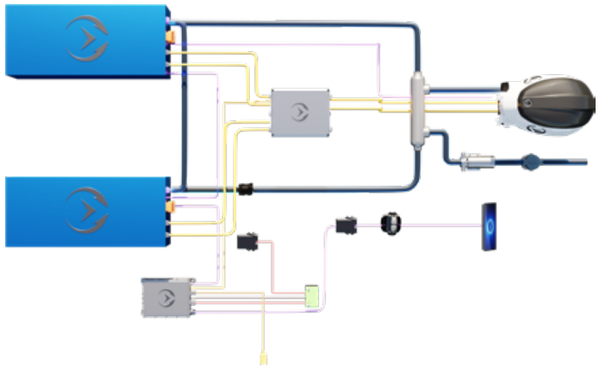

E-MOTION™
ELECTRIC POWERTRAIN TECHNOLOGY

E-Motion™ offers a powerful turnkey technology to manufacturers. Over the years, we have demonstrated its effectiveness to thousands of boating enthusiasts.

APPENDIX

116 MPH

WORLD'S FASTEST ELECTRIC BOAT SPEED RECORD



EMOTION
ELECTRIC POWERTRAIN TECHNOLOGY™

In 2023, Vision Marine Technologies reached a speed of 116 MPH at the Lake of the Ozarks Shootout, setting a new benchmark for electric boat performance.



VISION
MARINE TECHNOLOGIES

VMAR **Nasdaq** | **TSXV** Listed

Investor Relations
Bruce Nurse
(303) 919-2913
bn@v-mti.com

Website
visionmarinetechnologies.com
investors.visionmarinetechnologies.com